STAIR AND LANDING REQUIREMENTS

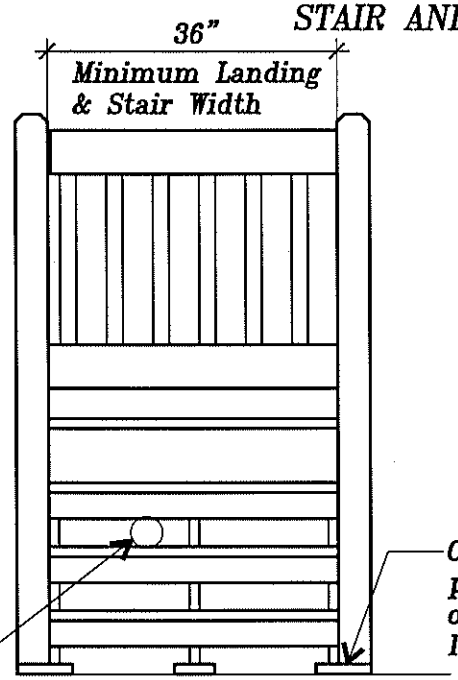

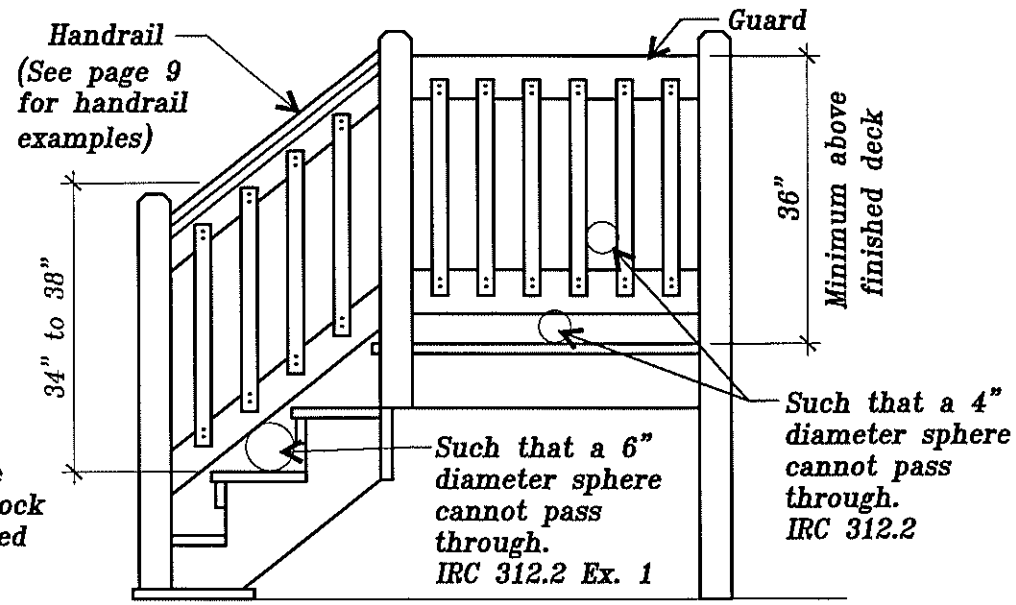

Closed risers such that a 4" diameter sphere cannot pass through IRC 311.5.3.3

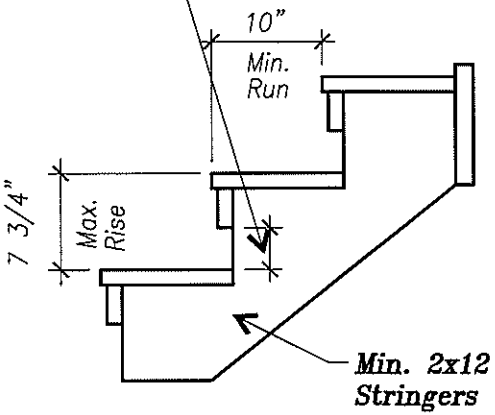

A nosing of not less than 3/4" but not more than 1 1/4" shall be provided on stairways with solid risers.

General Building Code Requirements

1. Stairways shall be supported on a concrete patio block or treated lumber pad.
2. Stairways to have a minimum width of 36" with a max. rise of 7 3/4" and a min. run of 10". The greatest riser height or tread depth in a flight of stairs shall not exceed the smallest by more than 3/8". IRC R311.5
3. A stairway with 4 or more risers shall have a handrail 34" to 38" above the nose of the tread to the top of the handrail. IRC R311.5.6
4. The handrail shall be continuous the full length of the stairway and shall terminate at a newel post or safety terminal at each end. IRC R311.5.6
5. A minimum 36" x 36" landing is required at the top of stairs. A landing or flat ground may be used at the bottom of stairs. IRC R311.5.4
6. The triangle area between the stair riser and tread at the bottom of the guard must be such that a sphere 6" in diameter cannot pass through. IRC R312.2 EX. 1
7. All decks, balconies or porches which are more than 30" above grade or a floor below must be protected by a guard a minimum of 36" above the finished surface. Guards and stair railings shall have horizontal, vertical or diagonal intermediate rails through which a sphere 4" in diameter cannot pass through. IRC R312

ACCEPTABLE HANDRAIL EXAMPLES

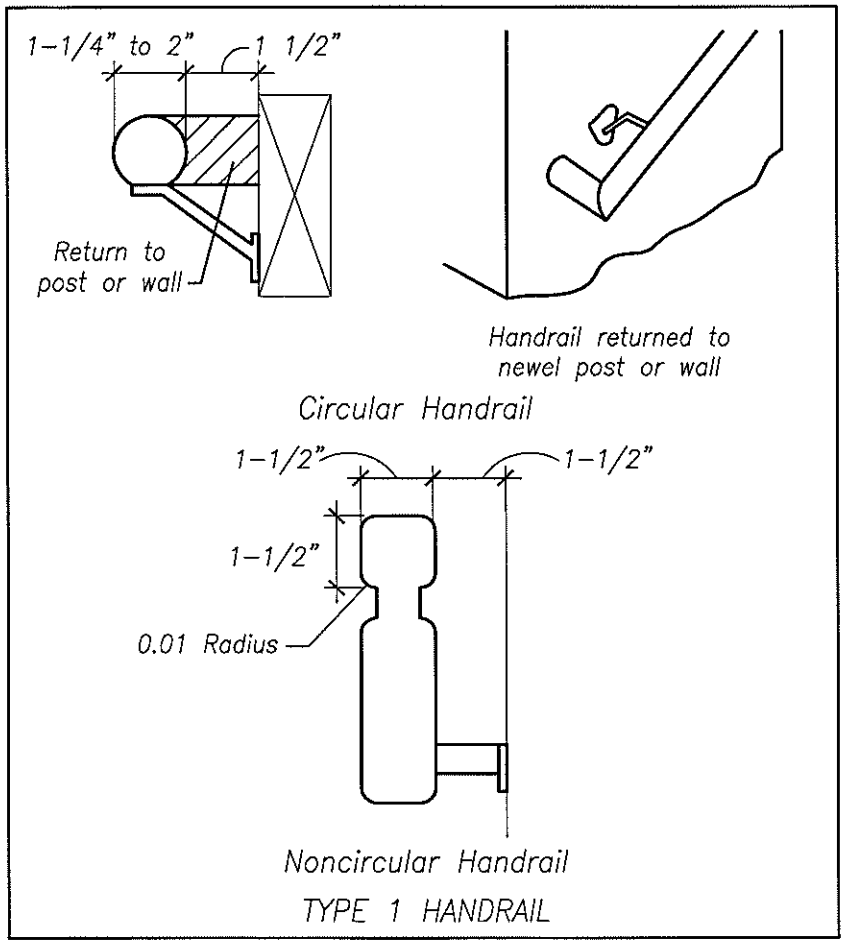

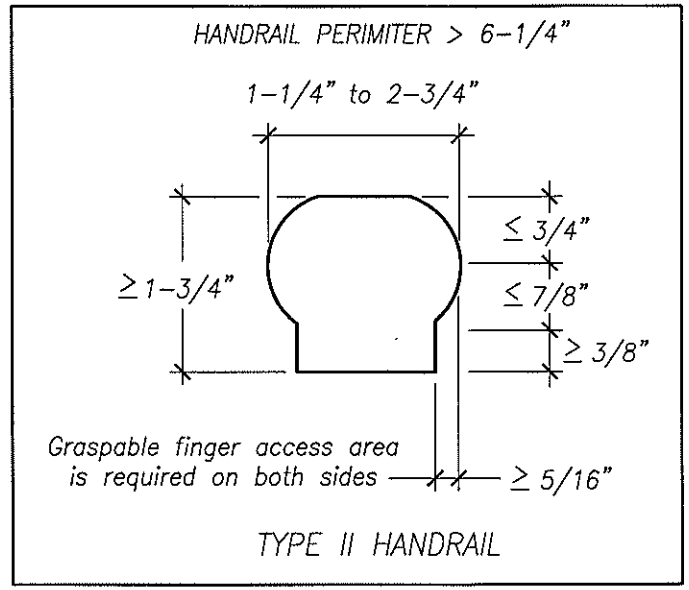

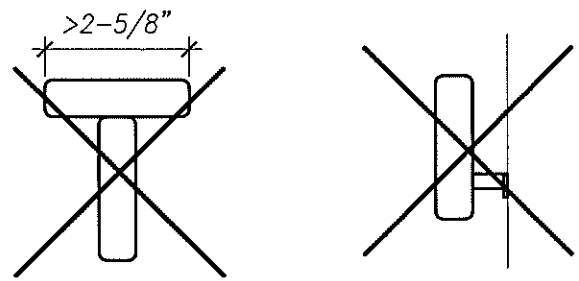

Not acceptable **Not acceptable**

IRC R311.5.6.3: Handrail Grip Size
All required handrails shall be of one of the following types or provide equivalent graspability.
Type 1: Handrails with a circular cross section shall have an outside diameter of at least 1-1/4" and not greater than 2". Noncircular shall have a perimiter of at least 4" and not greater than 6-1/4" with a max. cross section of 2-1/4". See the Type 1 details above.
Type II: Handrails greater than 6-1/4" shall provide a graspable finger access area on both sides of the profile. See the type II detail above.