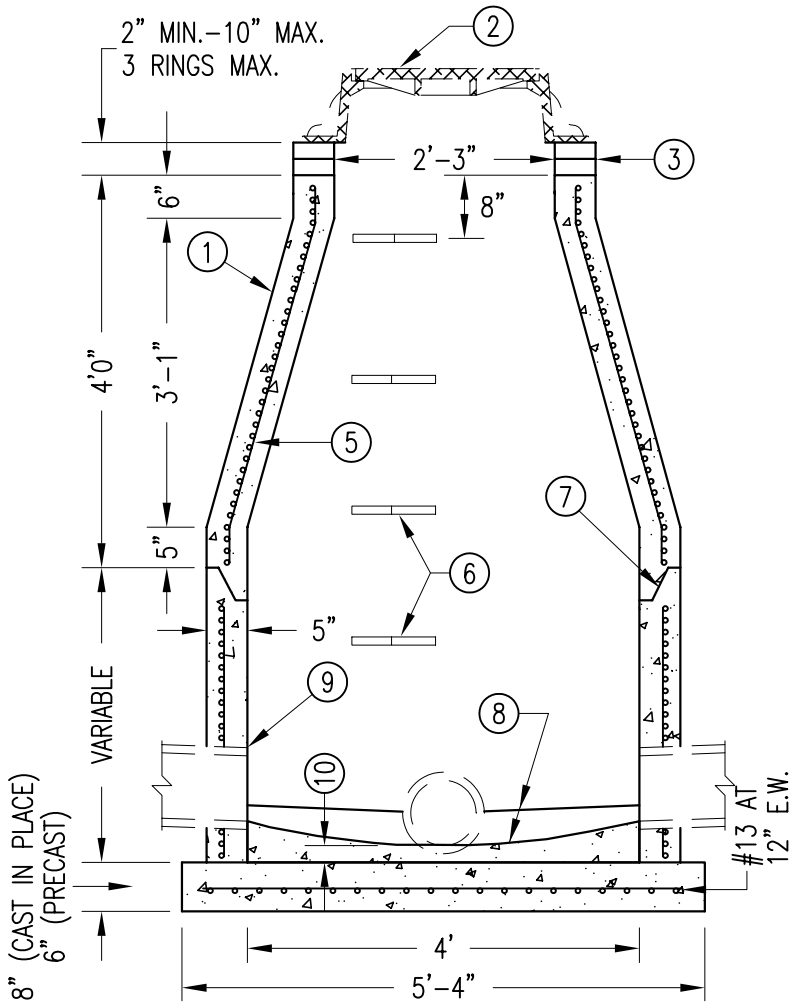

SECTION A–A

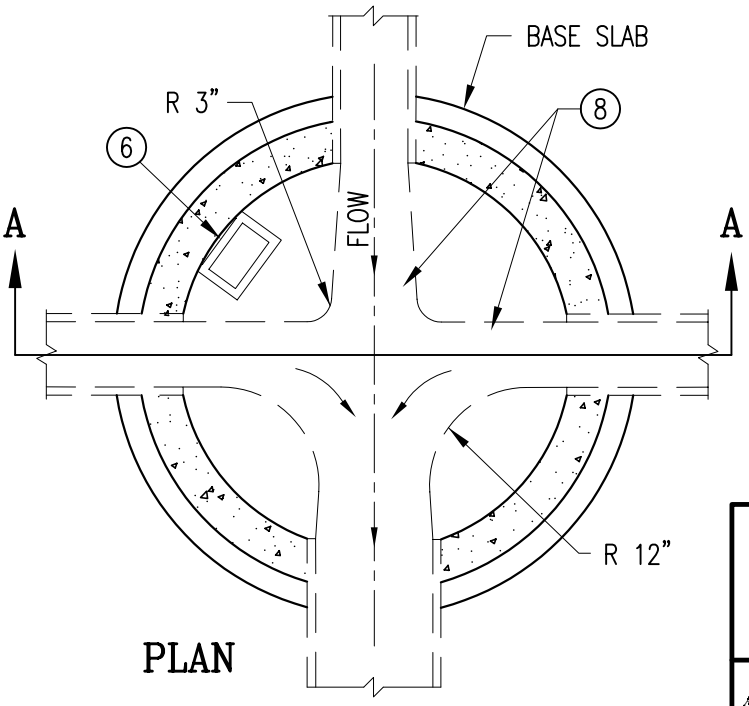

PLAN

NOTES

1. CONE SHALL BE CONCENTRIC.
2. REFER TO PLANS AND S.D.P. 1–11 FOR CASTING REQUIRED. CASTING SHALL BE BOLTED TO CONCRETE IN FIELD APPLICATIONS.
3. ADJ. RINGS SHALL BE PER S.D.P. 1–12, AND BE FULLY MORTARED.
4. STRUCTURE SHALL BE PRECAST CONCRETE.
5. REINF. SHALL BE A MIN. OF A SINGLE LINE STEEL WIRE FABRIC HAVING AN AREA OF NOT LESS THAN 0.12 SQ. IN. PER FOOT IN EACH DIRECTION.
6. STEPS ARE SPACED 16" O.C. MAX. AND SHALL CONFORM TO MN/DOT S.P. 4180 J. STEPS SHALL BE ORIENTED ON THE UPSTREAM LEFT SIDE AS SHOWN.
7. ALL JOINTS TO BE GASKETED. REFER TO MN/DOT SPEC. 3726.
8. PROVIDE CONCRETE FILLETS TO FIT BOTTOM PORTION OF PIPE TO DIRECT FLOW TO OUTLET AT 1/4" PER FT. MIN. SLOPE. SHAPE CHANNELS TO HAVE SMOOTH ROUND INVERTS. DEPTH OF CHANNELS SHALL NOT BE LESS THAN 1/2 THE PIPE SIZE.
9. DROP INLET USED FOR SAN. SEWER DROPS GREATER THAN 1.0 FT.
10. MINIMUM CONCRETE THICKNESS AT LOWEST INVERT SHALL BE 1 1/2".
11. STRUCTURE TYPE 3 OR 3A REQUIRED FOR NEW SANITARY SEWER CONSTRUCTION.
12. MAX. PIPE SIZE:
    24" FOR STRAIGHT THRU TO 135°
    18" FOR 90° BEND
13. DROP PIPE TO BE ENCASED IN GROUT IF FLEXIBLE PIPE, OR GRANULAR ENCASEMENT IF RIGID PIPE IS USED.

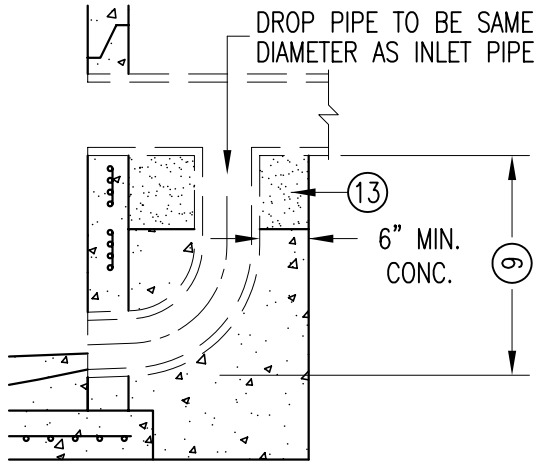

TYPE 2A FOR DROP–INLET

DEPARTMENT OF PUBLIC WORKS
CITY OF ROCHESTER, MINNESOTA

STRUCTURE TYPES 2 AND 2A

ASST. CITY ENGINEER	DIRECTOR		
SHT 1 OF 1 SHTS	DATE REVISED 6/15/07	PLATE NO. 1–02	REV. G