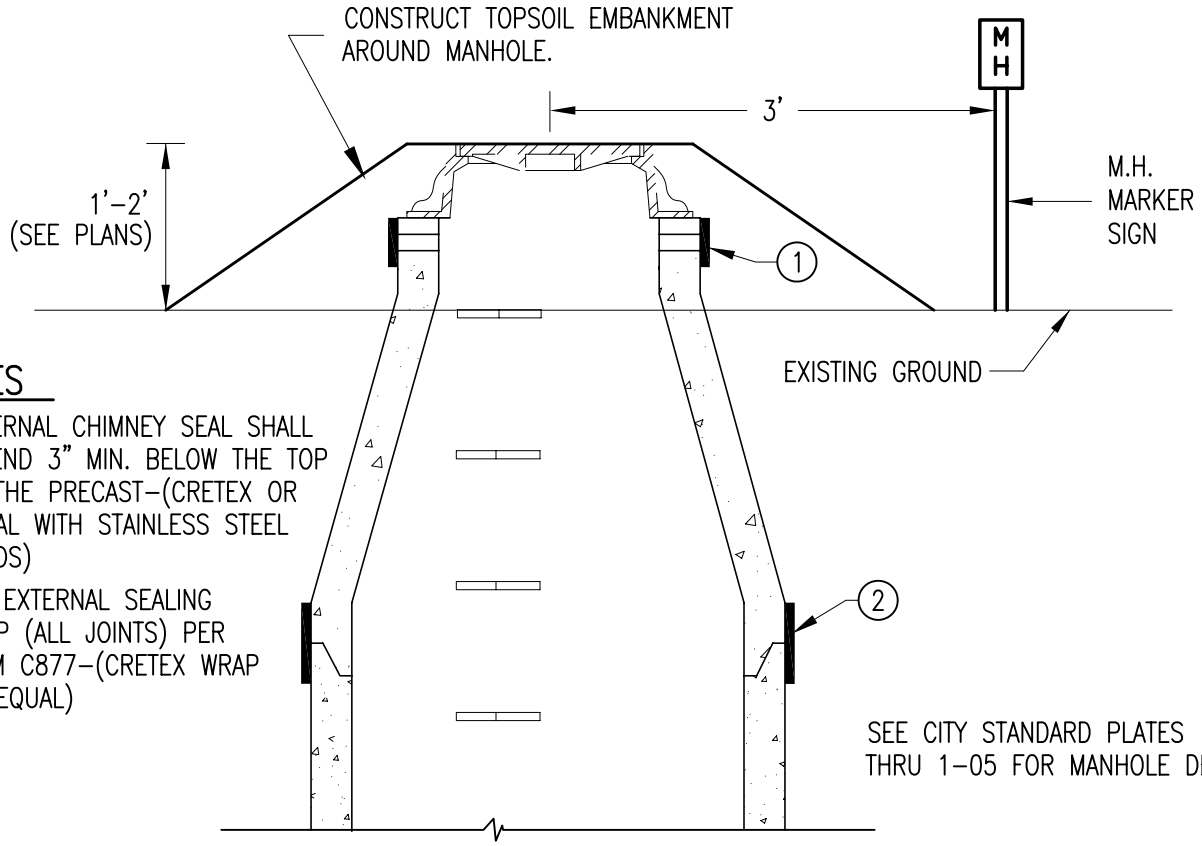

NOTES

1. EXTERNAL CHIMNEY SEAL SHALL EXTEND 3" MIN. BELOW THE TOP OF THE PRECAST-(CRETEX OR EQUAL WITH STAINLESS STEEL BANDS)
2. 12" EXTERNAL SEALING WRAP (ALL JOINTS) PER ASTM C877-(CRETEX WRAP OR EQUAL)

SEE CITY STANDARD PLATES 1-03 THRU 1-05 FOR MANHOLE DETAILS.

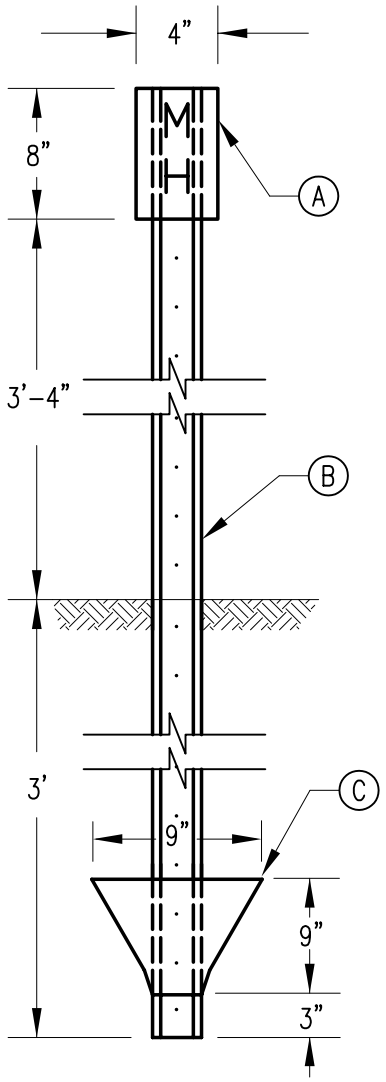

NOTES

A. SHEET ALUMINUM SIGN BOLTED TO POST. SIGN SHALL READ "M.H." IN 2 INCH BLACK LETTERS ON WHITE REFLECTORIZED BACKGROUND.

B. FLANGED CHANNEL SIGN POSTS SHALL BE A MINIMUM OF 2.75 POUNDS PER FOOT, AND SHALL MEET MN/DOT 3401.

C. 1/8" SHEET STEEL SHALL BE ASTM A1011, GRADE D SHALL BE BOLTED OR WELDED TO CHANNEL.

DEPARTMENT OF PUBLIC WORKS
CITY OF ROCHESTER, MINNESOTA

MANHOLE WATERPROOFING (NON-PAVED AREAS)

ASST. CITY ENGINEER	DIRECTOR		
SHT 1 OF 1 SHTS	DATE REVISED 3/22/06	PLATE NO. 1-07	REV. A