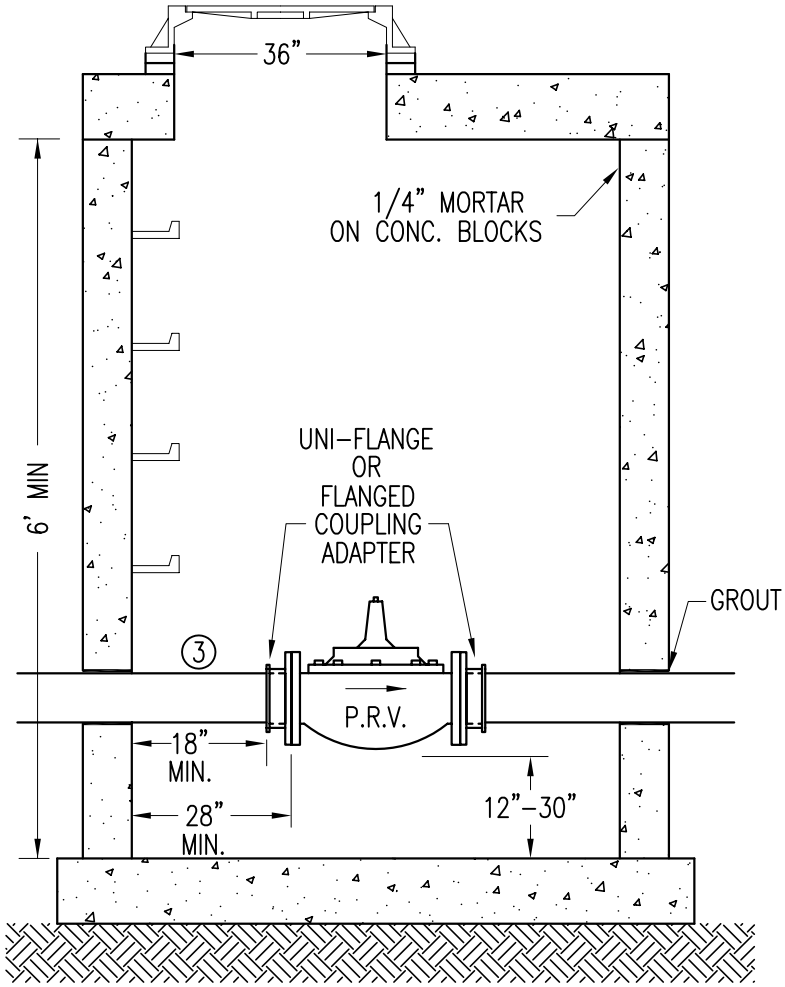

NOTES

1. STRUCTURE SHALL BE AS PER S.D.P. 1-04.
2. P.R.V.'(S) TO BE FURNISHED BY ROCHESTER PUBLIC UTILITIES AND INSTALLED BY THE CONTRACTOR.

(3) UNI-FLANGE OR FLANGED COUPLING ADAPTER ON THE HIGH PRESSURE SIDE OF THE P.R.V. SHALL BE RESTRAINED PER S.D.P. 6-05.

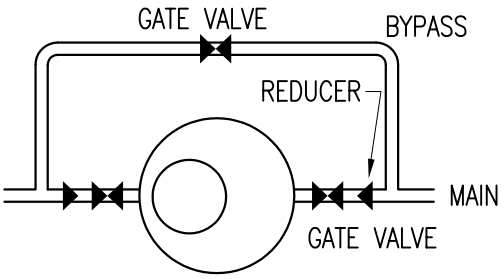

BYPASS
(NECESSARY FOR SINGLE PRV INSTALLATION ONLY)

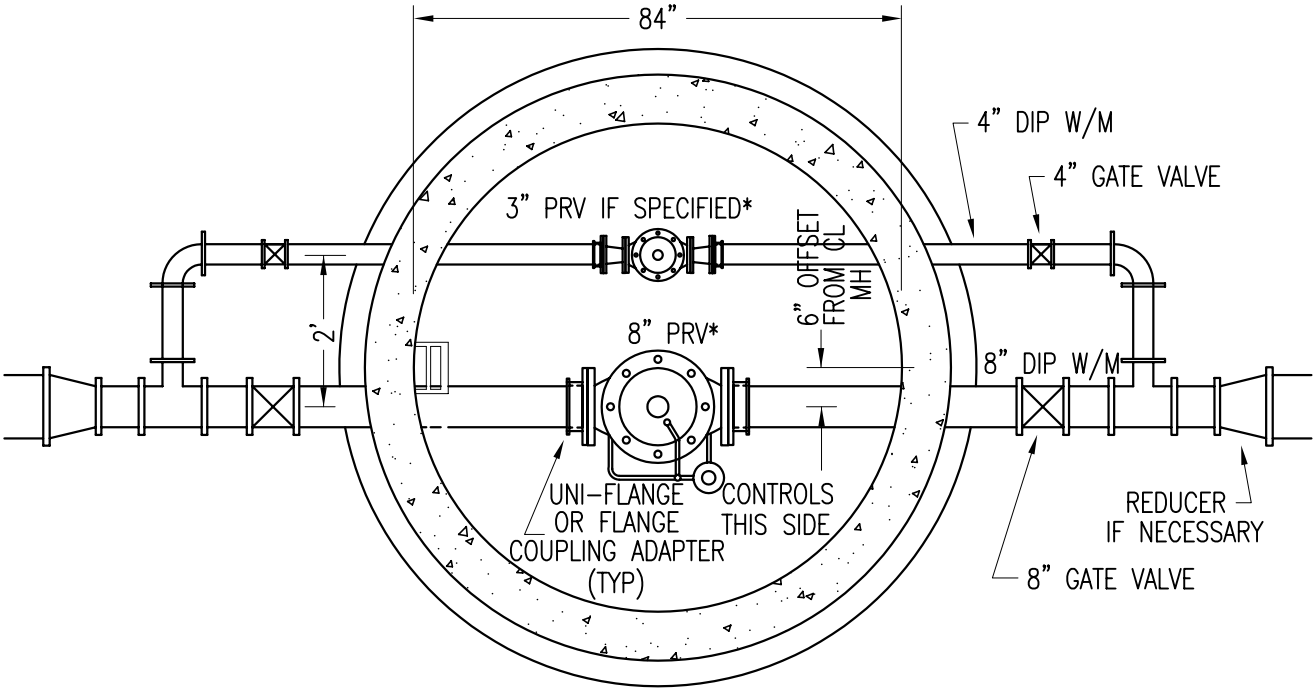

DEPARTMENT OF PUBLIC WORKS
CITY OF ROCHESTER, MINNESOTA

PRESSURE REDUCING VALVE MANHOLE

Douglas C. Rovang RPU-WATER UTILITY	Russell W. Friese DIRECTOR

SHT 1 OF 1 SHTS	DATE REVISED 6/15/07	PLATE NO. 6-03	REV. C