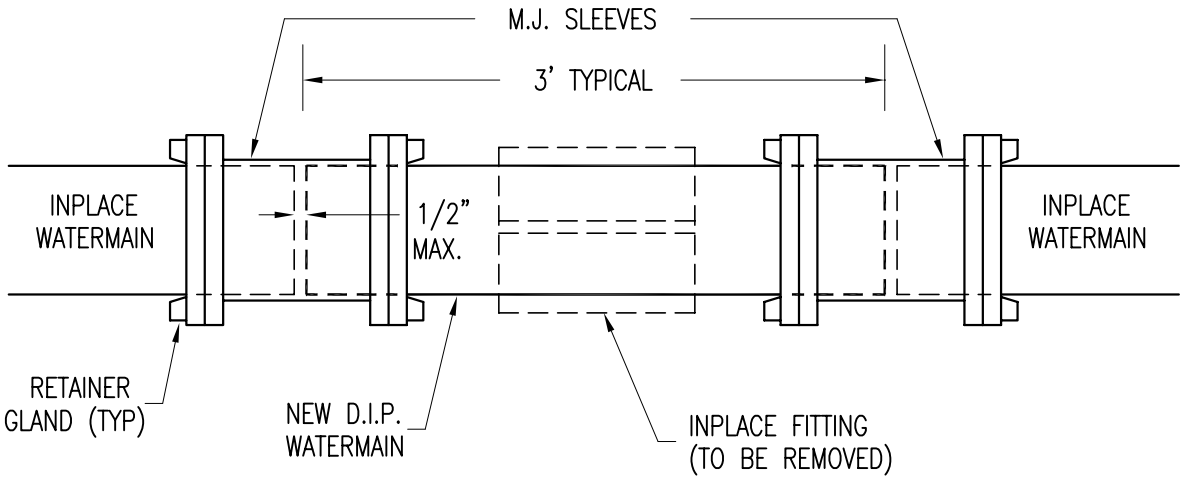

TYPICAL FITTING REMOVAL DETAIL

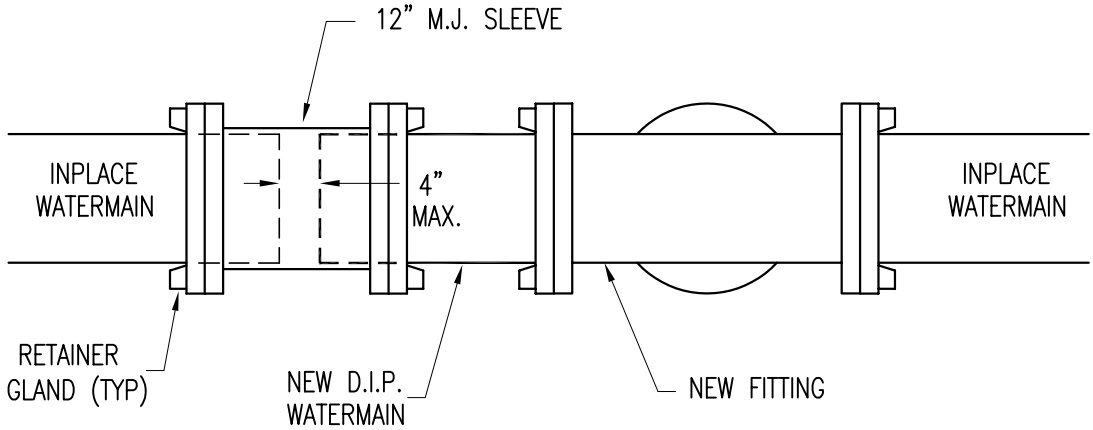

TYPICAL "CUT-IN" FITTING DETAIL

NOTE

1. USE 8" BLOCKING UNDER SLEEVES TO PREVENT SHEARING DUE TO SETTLEMENT.

DEPARTMENT OF PUBLIC WORKS
CITY OF ROCHESTER, MINNESOTA

TYPICAL FITTING CUT-IN AND REMOVAL DETAILS

Douglas C. Rovang RPU-WATER UTILITY	Russell W. Friese DIRECTOR

SHT 1 OF 1 SHTS	DATE REVISED 10/1/97	PLATE NO. 6-15	REV. A