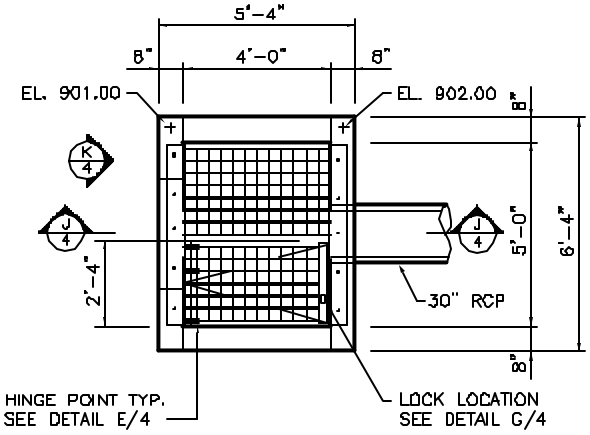

H 4 TOP PLAN (OUTLET STRUCTURE)
SCALE: 3/8"=1'-0"

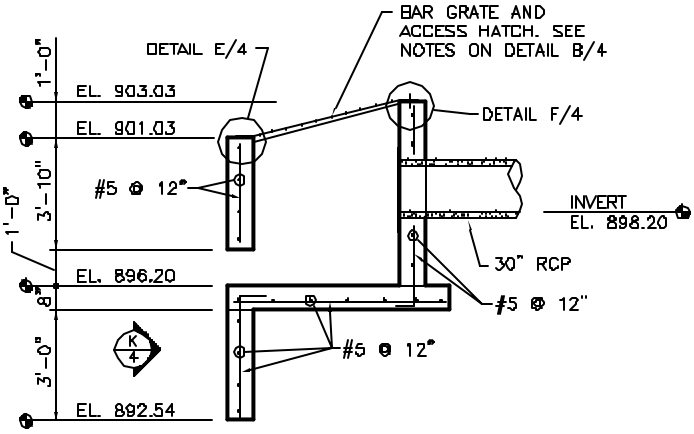

J 4 SECTION
SCALE: 3/8"=1'-0"

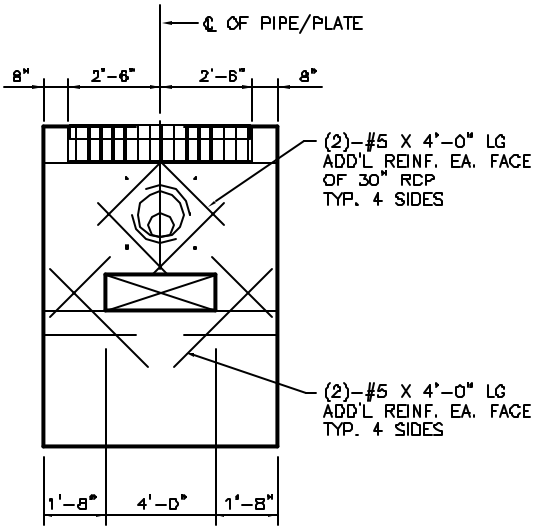

K 4 ELEVATION
SCALE: 3/8"=1'-0"

FREE FLOW SKIMMER WITH RESTRICTED OUTLET

ROCHESTER, MINNESOTA FIGURE 6-3

SURFACE WATER MANAGEMENT PLAN

Bonestroo Rosene Anderlik & Associates

\363\36306\36306W06.DWG 2/08/97 COMM. 36306 HDG